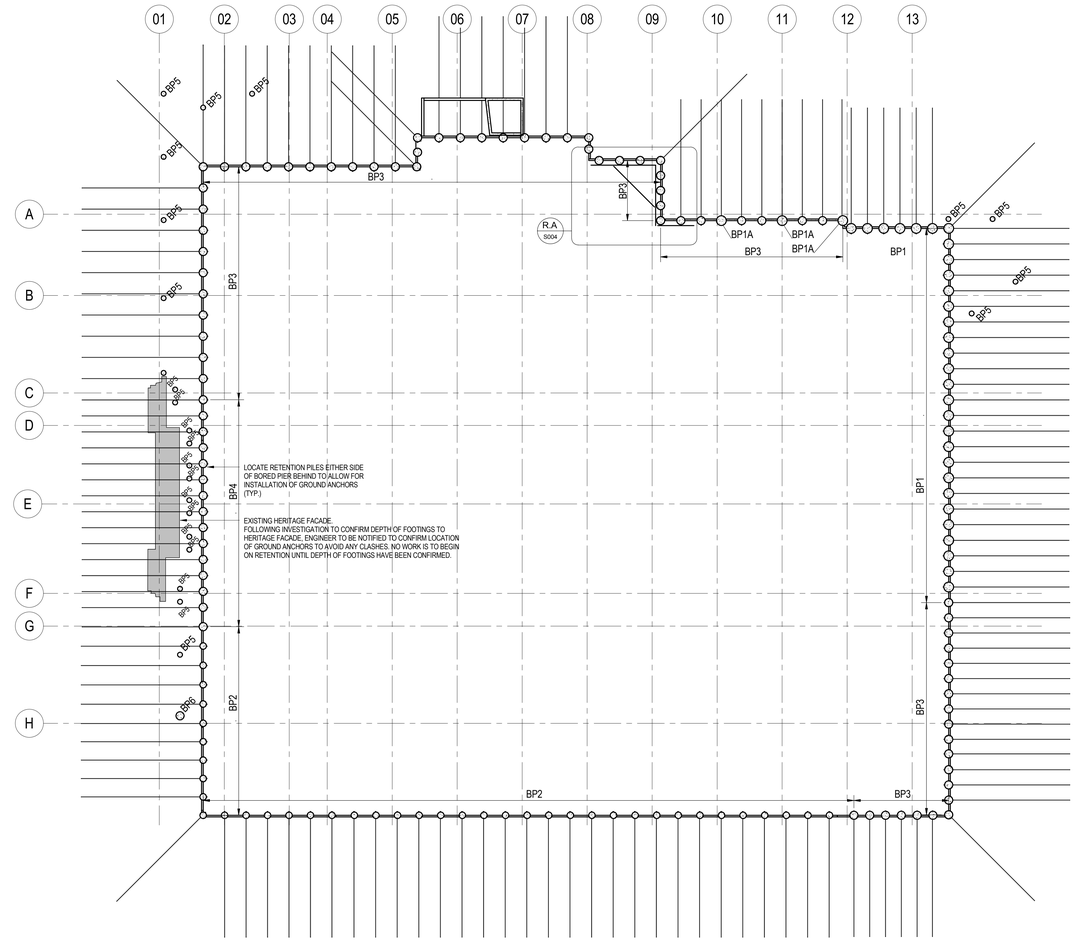


## BULK EXCAVATION & SITE RETENTION PLAN

SCALE: 1 : 200

### LEGEND

BP# — DENOTES BORED PILES MARK TYPE

DENOTES GROUND ANCHOR (DESIGNED BY OTHERS) REFER TO DRAWINGS S006 & S007 FOR SAFE WORKING LOADS. REFER TO DRAWING S008 FOR GROUND ANCHOR DETAILS.

**RETENTION STEEL BEAM SCHEDULE**

| MARK | SIZE | REMARKS |
|---|---|---|
| WB1 | 250UC89 | WALING BEAM |

**RETENTION BORED PILE SCHEDULE**

| MARK | SIZE | REINFORCEMENT LIGS | REINFORCEMENT VERTICAL | CONCRETE STRENGTH (Fc) (MPa) | FOUNDING MATERIAL | SOCKET LENGTH (m) |
|---|---|---|---|---|---|---|
| BP1 | 900 Ø | N12-200 | 12N32 | 40 | MODERATELY TO EXTREMELY WEATHERED SILTSTONE/SANDSTONE | REFER ELEVATIONS |
| BP1A | 900 Ø | N12-200 | 12N32 | 40 | MODERATELY TO EXTREMELY WEATHERED SILTSTONE/SANDSTONE | REFER ELEVATIONS |
| BP2 | 850 Ø | N12-200 | 12N24 | 40 | MODERATELY TO EXTREMELY WEATHERED SILTSTONE/SANDSTONE | REFER ELEVATIONS |
| BP3 | 750 Ø | N12-200 | 12N28 | 40 | MODERATELY TO EXTREMELY WEATHERED SILTSTONE/SANDSTONE | REFER ELEVATIONS |
| BP4 | 750 Ø | N12-200 | 12N28 | 40 | MODERATELY TO EXTREMELY WEATHERED SILTSTONE/SANDSTONE | REFER ELEVATIONS |
| BP5 | 450 Ø | N12-300 | 8N28 | 40 | MODERATELY TO EXTREMELY WEATHERED SILTSTONE/SANDSTONE | 12m |
| BP6 | 750 Ø | N10-300 | 8N28 | 40 | MODERATELY TO EXTREMELY WEATHERED SILTSTONE/SANDSTONE | 12m |

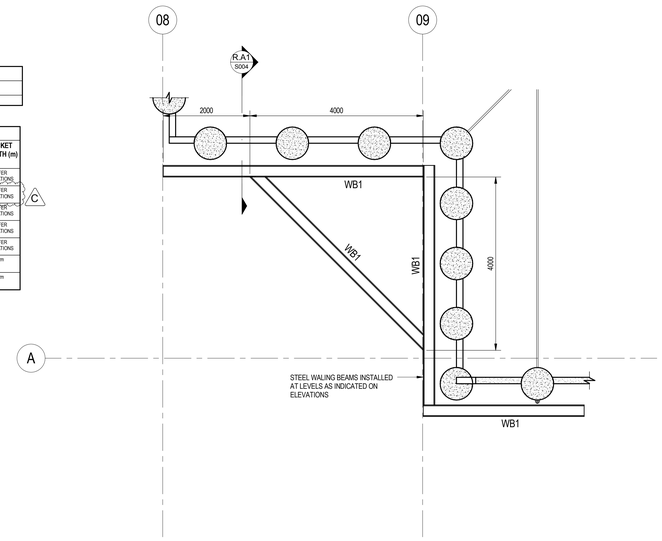


DETAIL R.A / S004
SCALE 1 : 50

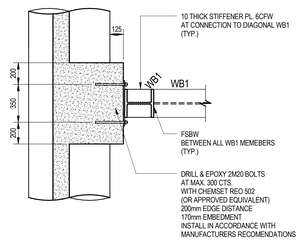


SECTION R.A1 / -
SCALE 1 : 20

## GENERAL NOTES:

G1 REFER TO DRAWING S002 FOR GENERAL NOTES & SPECIFICATIONS.
G2 REFER TO DRAWING S008 FOR PILE, CAPPING BEAM & SHOTCRETE WALL SCHEDULES
G3 REFER GEOTECHNICAL REPORT No. 23429 DATED OCTOBER 2011 PREPARED BY AURECON
G4 REFER TO ARCHITECT'S DRAWINGS FOR PILE/PILE CAP SETTING OUT

## BULK EXCAVATION NOTES:

B1 THE CONTRACTOR IS TO NOTIFY ALL SERVICE AUTHORITIES AND ARRANGE FOR DISCONTINUANCE OF SERVICES OR SUPPLY AS APPLICABLE AND DO ALL CUTTING, DISCONNECTION OR SEALING OFF OF SERVICES AND DRAINS AS REQUIRED. SERVICES OR SUPPLY LINES THAT ARE TO BE RETAINED SHALL REMAIN UNDAMAGED AND GIVEN ALL NECESSARY PROTECTION.

B2 SERVICES SHOWN ON THESE DRAWINGS HAVE BEEN OBTAINED FROM THE RELEVANT AUTHORITIES, BUT IT IS THE CONTRACTOR'S RESPONSIBILITY TO CONFIRM THEIR LOCATIONS AND TO ENSURE THAT ANY SERVICE THAT IS TO REMAIN IS NOT DAMAGED OR AFFECTED BY THE WORKS.

B3 THE BULK EXCAVATION SHALL BE CARRIED OUT IN ACCORDANCE WITH THE BULK EXCAVATION PROFILE. EXCESS EXCAVATIONS SHALL NOT BE CAUSE FOR A VARIATION. EXCESS EXCAVATION SHALL BE FILLED BY THE CONTRACTOR WITH 6% CEMENT STABILISED SAND UNLESS OTHERWISE APPROVED BY THE SUPERINTENDENT.

B4 THE CONTRACTOR SHALL PROVIDE AND DO ALL BRACING OR SHORING NECESSARY TO RETAIN EARTH BANKS, ROADS, PAVEMENTS, WALLS AND FOOTINGS OF ADJOINING PROPERTIES AND PREVENT CAVING AND DISPLACEMENT OF ADJACENT SOIL OR STRUCTURES AND PROVIDE ALL NECESSARY COMPONENTS OF SUCH BRACING.

B5 ALL EXCAVATED MATERIAL SHALL BE REMOVED FROM THE SITE AND SHALL NOT BE USED FOR LEVELLING UNDERVARIOUS AREAS. FILLING EXCESS EXCAVATIONS OR BACKFILLING BEHIND RETAINING WALLS UNLESS WRITTEN APPROVAL HAS BEEN OBTAINED FROM THE SUPERINTENDENT.

B6 THE CONTRACTOR SHALL PROVIDE PUMPS, TEMPORARY SUMPS AND DRAINS AND DO ALL BAILING ETC AS MAY BE NECESSARY TO ENSURE THAT NO WATER IS PERMITTED TO REMAIN IN THE EXCAVATION AT ANY TIME.

B7 BULK EXCAVATION BATTERS AROUND THE PERIMETER OF THE SITE ARE TO BE AS SHOWN BELOW UNLESS NOTED OTHERWISE ON THE DRAWINGS.

B8 WHERE BLASTING IS PERMITTED BY THE SUPERINTENDENT TO REMOVE ANY ROCK OR OBSTRUCTION IT SHALL BE DONE BY EXPERIENCED PERSONNEL IN STRICT ACCORDANCE WITH THE RELEVANT AUTHORITIES REQUIREMENTS. SHOULD BLASTING BE PERMITTED IT SHALL BE THE CONTRACTORS RESPONSIBILITY TO TAKE ALL PRECAUTIONS NECESSARY FOR THE PROTECTION OF ADJACENT BUILDINGS AND TO CONFORM TO ALL RELEVANT AUTHORITIES REQUIREMENTS HAVING JURISDICTION OVER THE WORK.

## BORED PIER NOTES:

BP1 SCOPE
THE WORK TO BE CARRIED OUT BY THE CONTRACTOR COMPRISES THE CONSTRUCTION OF THE BORED PILE FOOTINGS SHOWN ON THE DRAWINGS.

BP2 SITE INVESTIGATIONS
REFER TO FOOTING NOTES ON THE DRAWINGS FOR DETAILS OF THE GEOTECHNICAL REPORT.

BP3 DESIGN
ALL BORED PIERS SHALL BE DESIGNED TO THE REQUIREMENTS OF AS 2159.
THE BORED PILES MAY BE REDESIGNED BY THE CONTRACTOR, IN WHICH CASE THE DESIGN OF THE BORED PILES IS TO BE THE RESPONSIBILITY OF THE CONTRACTOR. THE DESIGN OF THE BORED PILES IS TO BE BASED ON THE REQUIRED SAFE WORKING LOADS AS NOTED ON THE DRAWINGS AND THE RECOMMENDATIONS OF THE GEOTECHNICAL REPORT. ALTERNATIVE DESIGN COMPUTATIONS AND DRAWINGS ARE TO BE SUBMITTED TO THE SUPERINTENDENT. THE CERTIFYING ENGINEER AND THE BUILDING SURVEYOR IN ORDER TO OBTAIN A BUILDING PERMIT FOR THE BORED PILES.
PERMANENT LINING IS TO BE AS DETAILED ON THE DRAWINGS. ALTERNATIVELY, THE PERMANENT LINING ON THE BORED PILES MAY BE REDESIGNED AND DETAILED BY THE CONTRACTOR SUCH THAT THE LINING SHALL VERTICALLY ISOLATE THE BORED PILE FROM THE SURROUNDING GROUND WHILE PROVIDING THE REQUIRED HORIZONTAL SUPPORT
WHERE THE FINAL CUT-OFF LEVEL IS ABOVE NATURAL GROUND LEVEL, THE PILES MUST BE FORMED TO THE CORRECT LEVEL BY USING TEMPORARY LINERS.

BP4 ADJACENT BUILDINGS AND SERVICES
THE CONTRACTOR IS RESPONSIBLE FOR ENSURING THAT ANY VIBRATIONS AND/OR HORIZONTAL OR VERTICAL GROUND DISPLACEMENTS ARE CONTROLLED AND DO NOT IMPACT ON ADJOINING BUILDINGS OR SERVICES. THE CONTRACTOR SHALL ALLOW FOR THE COST AND UNDERTAKE ANY MONITORING REQUIRED FOR ADJACENT BUILDINGS OR SERVICES.

BP5 TOLERANCE
THE CONTRACTOR IS RESPONSIBLE FOR PROPERLY SETTING OUT THE PILE LOCATIONS.
FOUNDING LEVELS OF THE BORED PILE BASES ARE TO BE DETERMINED ON SITE AND APPROVED BY THE GEOTECHNICAL ENGINEER. ANY MINIMUM TOP OF PILE OR MAXIMUM BASE OF PILE LEVELS INDICATED ON THE DRAWINGS SHALL BE COMPLIED WITH BY THE CONTRACTOR.
TOPS OF THE BORED PILES ARE TO BE SUCH THAT THEY ARE WITHIN 0MM AND -50MM OF THE LEVELS INDICATED ON THE DRAWINGS.
THE VERTICAL CENTRELINE OF THE BORED PILES ARE TO BE WITHIN +50MM OF THE POSITION OF THE CENTRELINE OF EACH BORED PILE AS SHOWN ON THE DRAWINGS.
EVERY SHAFT SHALL BE BORED TO WITHIN A TOLERANCE IN RESPECT OF DEPARTURE FROM TRUE VERTICALLY OF 1 IN 120 OR 75MM WHICHEVER IS THE LESSER.

BP6 PERFORMANCE REQUIREMENTS
THE INSTALLED PILES SHALL CARRY THE DESIGN LOADS NOTED ON THE DRAWINGS WITHIN THE TOLERANCE REQUIREMENTS SPECIFIED IN AS 2159.
THE CONTRACTOR SHALL BE RESPONSIBLE FOR VERIFICATION THAT THE INSTALLED PILES ACHIEVE THE SPECIFIED PERFORMANCE REQUIREMENTS TO THE SATISFACTION OF THE SUPERINTENDENT.

BP7 ROCK SOCKETS
THE ROCK SOCKET IS THE LENGTH OF SHAFT AT THE LOWER END OF THE BORED PILE WHICH IS ENTIRELY IN SILTSTONE/SANDSTONE ROCK (OR BETTER) AND IS THE PORTION OF THE SHAFT THROUGH WHICH THE LOAD IN THE PILE IS TRANSFERRED BY SIDE FRICTION TO THE FOUNDATION MATERIAL. THE VERTICAL SURFACE OF THE ROCK SOCKET MUST BE LEFT IN A ROUGH CONDITION BY SPIRAL GROOVING AFTER EXCAVATION, FREE FROM LOOSE MATERIAL AND/OR CLAY SMEAR.
THE CONTRACTOR IS TO MAKE ALLOWANCE FOR VARYING ROCK CONDITIONS ALONG THE LENGTH OF THE ROCK SOCKET IN THE TENDER. THE LENGTH OF THE ROCK SOCKET IS TO BE ADJUSTED ACCORDINGLY TO SUIT THE ROCK CONDITIONS ENCOUNTERED DURING BORING OPERATIONS.

BP8 LINING OF SHAFTS
TEMPORARY LINING OF SHAFTS AS NECESSARY SHALL BE PROVIDED BY THE CONTRACTOR TO PREVENT COLLAPSE DUE TO THE PRESENCE OF UNSTABLE MATERIAL, GROUND WATER OR OTHER UNFORESEEN CIRCUMSTANCES. THE CONTRACTOR SHALL PROVIDE ALL EQUIPMENT NECESSARY FOR PLACEMENT AND REMOVAL OF TEMPORARY LINERS.
PERMANENT LINING IS TO BE AS DETAILED ON THE DRAWINGS. ALTERNATIVELY, THE PERMANENT LINING ON THE BORED PILES MAY BE REDESIGNED AND DETAILED BY THE CONTRACTOR SUCH THAT THE LINING SHALL VERTICALLY ISOLATE THE BORED PILE FROM THE SURROUNDING GROUND WHILE PROVIDING THE REQUIRED HORIZONTAL SUPPORT.
WHERE THE FINAL CUT-OFF LEVEL IS ABOVE NATURAL GROUND LEVEL, THE PILES MUST BE FORMED TO THE CORRECT LEVEL BY USING TEMPORARY LINERS.

BP9 CLEARING OUT & INSPECTIONS
AFTER EXCAVATIONS HAVE BEEN COMPLETED THE BASES SHALL BE CLEANED OUT AND RECEIVE APPROVAL FROM THE GEOTECHNICAL ENGINEER BEFORE REINFORCEMENT CAGES ARE SET IN POSITION AND CONCRETE PLACED.
CLEARING OUT THE BASE OF ANY SHAFT MEANS ALL LOOSE AND SOFTENED MATERIAL SHALL BE REMOVED AND DE-WATERED IF REQUIRED BY THE GEOTECHNICAL ENGINEER.
THE CONTRACTOR SHALL ALLOW FOR THE COST OF GEOTECHNICAL INSPECTIONS AND FOR ANY DE-WATERING REQUIRED.

BP10 GROUND WATER
WATER SHALL BE DIVERTED TO A PROPERLY SITED SUMP AND THE PILING CONTRACTOR SHALL SUPPLY AND INSTALL A PUMP OF ADEQUATE CAPACITY AND HAVE ON SITE A STANDBY UNIT OF SIMILAR CAPACITY.
THE TOP OF THE HOLE SHALL BE PROPERLY COVERED TO PREVENT SURFACE WATER OR RAINFALL FROM ENTERING THE HOLE.

BP11 REINFORCEMENT
ALL STEEL REINFORCEMENT SHALL COMPLY WITH THE REQUIREMENTS OF AS1302, AS 1303, AND AS 3600.
LOOSE SCALE, SAND, MUD, OIL, PAINT AND OTHER ANTI-BOND MATERIALS SHALL BE REMOVED BEFORE PLACING THE REINFORCEMENT IN POSITION AND THE REINFORCEMENT SHALL BE FREE OF SLACK OR KINKS WHEN PLACED IN POSITION.
REINFORCEMENT SHALL BE PROPERLY FABRICATED INTO CAGES, SHALL BE INSTALLED IMMEDIATELY THE BASE OF ANY SHAFT HAS BEEN APPROVED AND SHALL BE SECURELY FIXED SO THAT NO VERTICAL MOVEMENT OCCURS WHILST CONCRETE IS BEING PLACED. APPROVED SPACERS SHALL BE PROVIDED AT 2 METER MAXIMUM CENTRES ALONG THE LENGTH OF THE BORED PILE TO MAINTAIN ADEQUATE COVER.

BP12 CONCRETE PLACING
CONCRETE IN BASES AND SHAFTS SHALL BE PLACED CONTINUOUSLY UP TO THE UNDERSIDE OF PILE CAPS. CONCRETE SHALL NOT BE DROPPED BUT SHALL BE PLACED USING A CONCRETE PUMP OR A PROPERLY CONSTRUCTED CHUTE.
WHERE PERMITTED BY THE SUPERINTENDENT, CONCRETE SHALL BE PLACED UNDERWATER USING A TREMIE. POURING SHALL PROCEED WITH THE TREMIE DISCHARGE AT ALL TIMES BELOW THE TOP SURFACE OF THE POURED CONCRETE. THE CONCRETE LEVEL SHALL BE BROUGHT UP CONTINUOUSLY UNTIL THE TOP LAYER OF CONCRETE THAT HAS BEEN IN CONTACT WITH THE FREE WATER CAN BE SATISFACTORILY REMOVED AND CONCRETING CAN PROCEED ABOVE WATER IN THE USUAL MANNER.
CONCRETING SHALL BE TEMPORARILY STOPPED WHEN THE CONCRETE IS WITHIN ONE METER OF THE TOP OF EACH LENGTH OF LINER, IF PROVIDED, AND THAT LENGTH OF LINER SHALL BE WITHDRAWN AND THE CONCRETE VIBRATED WITH IMMERSION TYPE VIBRATORS.

BP13 SAFETY
PROPER SAFETY PRECAUTIONS SHALL BE TAKEN TO AVOID INJURY TO PEOPLE. UNATTENDED HOLES SHALL BE COVERED OR FENCED OFF AT ALL TIMES.

BP14 TESTING
THE CONTRACTOR SHALL ALLOW FOR THE COST AND ARRANGE FOR THE INTEGRITY TESTING OF ALL BORED PILES.

BP15 ANCHOR STRESSING
BORED PIERS TO HAVE REACHED THEIR DESIGN COMPRESSIVE STRENGTH BEFORE STRESSING OF ANCHOR COMMENCES.

## GROUND ANCHOR NOTES:

GA1 GROUND ANCHORS ARE TO BE DESIGNED TO WITHSTAND THE WORKING LOADS AT THE LOCATIONS AND INCLINATIONS AS SHOWN ON THE DRAWINGS. ALL WORKMANSHIP AND MATERIALS SHALL BE IN ACCORDANCE WITH THE REQUIREMENTS OF AS3600, AS3610, AS1311, AS3102, AS1313 & AS1314 EXCEPT WHERE VARIED BY THE CONTRACT DOCUMENTS. THE DESIGN AND DETAILS ARE TO BE SUBMITTED TO THE SUPERINTENDENT FOR APPROVAL PRIOR TO COMMENCEMENT ON SITE.

GA2 ANCHORS SHALL CONSIST OF LOW RELAXATION STRESS RELIEVED SUPERGRADE STEEL STRAND TO AS1313 AND ANCHORAGES SHALL CONFORM TO AS1314.

GA3 IT IS THE CONTRACTORS RESPONSIBILITY TO DETERMINE THE GROUND ANCHOR TYPE, SIZE AND LENGTHS REQUIRED. ANY PROPOSED CHANGES BY THE CONTRACTOR TO THE ANCHORS SHOWN ON THE DRAWINGS SHALL GIVE AT LEAST EQUAL PROTECTION TO THE STRUCTURE AND ADJACENT PROPERTIES AS THE ANCHORS SHOWN ON THE DRAWINGS. ALTERNATIVE DESIGNS SHALL BE SUBMITTED FOR REVIEW AND WILL BE REQUIRED TO BE SUBMITTED TO THE ADJOINING OWNERS FOR APPROVAL. THIS WILL BE AT THE CONTRACTORS EXPENSE AND THE CONTRACTOR SHOULD ALLOW FOR THE TIME REQUIRED FOR THE REVIEW AND APPROVAL. THE CONTRACTOR SHALL BE REQUIRED TO VERIFY ANCHOR LENGTHS BY FOUR TEST ANCHORS AND TO PROOF LOAD EACH ANCHOR AS NOTED IN GA 9. A GEOTECHNICAL INVESTIGATION REPORT NO. 23429 BY AURECON IS AVAILABLE FOR GUIDANCE ONLY.

GA4 PRIOR TO ANY DRILLING OPERATIONS, THE CONTRACTOR SHALL ESTABLISH THE LOCATION OF ALL ADJACENT UNDERGROUND SERVICES AND ENSURE THAT NONE OF THESE ARE DISRUPTED BY GROUND ANCHORS. ALL APPROPRIATE APPROVALS, PERMITS AND AGREEMENTS SHALL BE OBTAINED BEFORE COMMENCEMENT OF THE WORK. SERVICE POSITIONS SHOWN ON THE DRAWINGS ARE APPROXIMATE ONLY. IT IS THE CONTRACTOR'S RESPONSIBILITY TO OBTAIN THE LOCATION OF ANY EXISTING SERVICES FROM THE RELEVANT AUTHORITIES, VERIFY THEIR LOCATION AND ENSURE THAT THEY ARE NOT DAMAGED OR AFFECTED BY THE WORKS.

GA5 ANCHOR HOLES SHALL BE DRILLED IN THE LOCATIONS AND TO THE LINES SHOWN ON THE DRAWINGS WITHIN TOLERANCES AS NOTED ON GA16. AN ALLOWANCE FOR OVER DRILLING SHALL BE ADDED TO THE DEPTH WHERE DETRITUS CANNOT BE REMOVED FROM THE BOTTOM OF THE HOLE. CASINGS SHALL BE PROVIDED WHEN NECESSARY TO PREVENT COLLAPSE OF THE HOLE DURING CONSTRUCTION OF THE ANCHORS. ON COMPLETION OF DRILLING, ALL HOLES SHALL BE CLEARED OUT AND SUITABLY PLUGGED OR OTHERWISE PROTECTED TO PREVENT ENTRY OF FOREIGN MATTER. UNDER NO CIRCUMSTANCES SHALL HOLES BE JETTED.

GA6 PRIOR TO HOMING, A GROUT TUBE (TO BE USED FOR SECONDARY GROUTING) SHALL BE TIED TO THE TENDONS. TENDONS SHALL BE HOMED PRIOR TO PRIMARY GROUTING.

GA7 BONDING BETWEEN TENDON AND ANCHORAGE SHALL BE BY A PROVEN METHOD. THE ANCHORAGE BOND LENGTH OF THE TENDON MUST BE CENTERED IN THE HOLE.

GA8 ANCHORS SHALL BE STRESSED AT THE APPROPRIATE STAGES OF THE CONSTRUCTION SEQUENCE, PROVIDED THAT THE BOND ANCHORAGE GROUT HAS REACHED THE REQUIRED STRENGTH. SUFFICIENT STRAND SHALL BE LEFT PROJECTING FROM THE ANCHORAGE TO ENABLE ANY SUBSEQUENT STRESSING.

GA9 PROOF TESTING OF ANCHORS SHALL BE AS FOLLOWS:-
JACK TO REQUIRED WORKING LOAD.
CHECK AND RECORD THE LOAD AFTER A MINIMUM PERIOD OF 24 HOURS THEN GRADUALLY JACK TO THE TEST LOAD (1.5 TIMES THE WORKING LOAD), AND HOLD FOR A MINIMUM PERIOD OF 5 MINUTES. SLOWLY DESTRESS TO THE WORKING LOAD AND LOCK OFF THE ANCHOR. IF THE GROUND ANCHOR FAILS TO HOLD THE TEST FOR THE MINIMUM PERIOD, IT SHALL BE REJECTED AND ANOTHER CONSTRUCTED AS DIRECTED BY THE SUPERINTENDENT. FAILURE IS DETERMINED BY MORE THAN 5% DROP IN LOAD. RE-CHECK AND RECORD THE GROUND ANCHOR LOAD NOT LESS THAN 2 DAYS AFTER THE INITIAL CHECK, AND AGAIN AT 21 DAYS.

A) IF THE LOAD IS GREATER THAN 90% OF THE WORKING LOAD, RE-JACK TO THE WORKING LOAD.

B) IF THE LOAD IS LESS THAN 90% OF THE WORKING LOAD, THE GROUND ANCHOR SHALL BE REJECTED AND ANOTHER CONSTRUCTED AS DIRECTED BY THE SUPERINTENDENT.

GA10 NOTE THAT TEST LOADING WILL INDUCE STRESSES VERY CLOSE TO 85% OF THE GUARANTEED UTS OF THE TENDON AND APPROPRIATE STRESSING SHALL BE USED TO ENSURE THAT THIS LIMIT IS NOT EXCEEDED AT ANY TIME. IN THE EVENT OF ANY ANCHOR REQUIRING ADDITIONAL LOAD TO BE PLACED IN IT, SUCH LOAD SHALL NOT EXCEED 85% OF THE GUARANTEED UTS OF THE TENDON.

GA11 THE CONTRACTOR SHALL REGULARLY MONITOR THE STRESS IN THE ANCHORS TO ENSURE NO MAJOR LOSSES ARE OCCURRING. IF STRESS LOSSES ARE DETECTED THEY SHALL BE IMMEDIATELY REPORTED TO THE SUPERINTENDENT.

GA12 THE CONTRACTOR SHALL KEEP ON SITE AND ADEQUATE SUPPLY OF ANCHOR CABLES, GROUT AND HAVE AVAILABLE SUITABLE EQUIPMENT FOR EMERGENCY USE.

GA13 GROUT SHALL CONSIST OF ACCURATELY WEIGHED OR MEASURED QUANTITIES OF CEMENT, WATER AND METHOCEL (OR EQUIVALENT). THE WATER CEMENT RATIO SHALL BE AS LOW AS POSSIBLE CONSISTENT WITH WORKABILITY REQUIREMENTS BUT SHALL NOT EXCEED 0.50.

GA14 AT THE APPROPRIATE STAGE OF THE CONSTRUCTION SEQUENCE, WHEN NOTIFIED BY THE SUPERINTENDENT ANCHORS SHALL BE DESTRESSED. ANCHOR HEADS REMOVED. ANCHORS CUT OFF 25mm INTO THE ANCHOR HOLE. HOLES FILLED WITH 40MPA NON SHRINK CEMENTITIOUS GROUT AND SURFACES MADE GOOD. ALL DRILLED HOLES SHALL BE FULLY GROUTED, INCLUDING REJECTED HOLES AFTER ANCHORS ARE DESTRESSED.

GA15 THE CONTRACTOR SHALL KEEP ACCURATE RECORDS OF THE GROUND ANCHORS IN A LOG BOOK ON SITE, WHICH SHALL BE BROUGHT UP TO DATE EACH DAY AS WORK PROCEEDS. THE FOLLOWING DATA SHALL BE ENTERED IN THE BOOK:

- GROUND ANCHOR IDENTIFICATION
- DRILLED DATE & TOTAL ANCHOR LENGTH
- GROUTED DATE AND GROUTED LENGTH
- WORKING LOAD & DATE APPLIED
- 1 DAY LOAD CHECK & DATE
- 3 DAY LOAD AND CHECK
- 21 DAY LOAD CHECK & DATE
- WEDGE & BARREL IDENTIFICATION NUMBERS

GA16 THE MAXIMUM PERMISSIBLE TOLERANCES ARE AS FOLLOWS:

A. HOLE LENGTH: +600MM -0MM
B. HOLE DIAMETER: +50MM -0MM
C. OUT OF LINE: 50MM IN 1000MM

## SHOTCRETE NOTES:

SC1 GENERAL
THE CONCRETE IN THE PANELS OR OTHER RETAINING WALL MEMBERS AS INDICATED ON THE DRAWINGS MAY BE PLACED BY THE SHOTCRETING PROCESS.

SC2 DEFINITIONS
THE FOLLOWING DEFINITIONS EXPLAIN THE MEANING OF CERTAIN WORDS AND TERMS AS USED IN THESE NOTES.
SPRAYED CONCRETE IS A MIXTURE OF CEMENT, AGGREGATE AND WATER PROJECTED AT HIGH VELOCITY FROM A NOZZLE INTO PLACES TO PRODUCE A DENSE HOMOGENEOUS MASS.
SHOTCRETE IS A TERM USED FOR SPRAYED CONCRETE WHERE THE MAXIMUM AGGREGATE SIZE IS NOT MORE THAN 20mm.
GUNITE IS A TERM USED FOR ALL MATERIAL HAVING PASSED THROUGH THE NOZZLE THAT DOES NOT CONFORM TO THE DEFINITION OF SPRAYED CONCRETE.
NOZZLE IS THE ATTACHMENT AT THE END OF THE MATERIAL HOSE FROM WHICH THE MATERIAL IS JETTED AT HIGH VELOCITY
NOZZLEMAN IS THE WORKMAN WHO MANIPULATES THE NOZZLE, CONTROLS CONSISTENCY, AND MAKES THE FINAL DISPOSITION OF THE MATERIAL.

SC3 MIX DESIGN
MIX PROPORTIONS SHALL BE DESIGNED BY THE CONTRACTOR AND SHALL BE TO THE APPROVAL OF THE SUPERINTENDENT. ALL CONCRETE SHALL BE OBTAINED FROM AN APPROVED CONCRETE SUPPLIER AND SHALL BE PRE-MIXED AND DELIVERED TO SITE IN ACCORDANCE WITH AS 3178. WHERE PERMITTED BY THE SUPERINTENDENT FOR ADDITION TO THE MIX TO SPEED THE SETTING RATE OF THE CEMENT, THE FOLLOWING SETTING TIMES AND STRENGTHS SHALL APPLY UNLESS OTHERWISE STATED.
A) INITIAL SET OF CEMENT/ADMIXTURE PASTE....3 MINS.
FINAL SET OF CEMENT/ADMIXTURE PASTE....10 MINS.
B) 6 HOUR STRENGTH OF CONCRETE....3 MPa
24 HOUR STRENGTH OF CONCRETE....10 MPa
ALL CONSTITUENTS SHALL BE UNIFORMLY DISPERSED THROUGHOUT THE MIX.

SC4 QUALIFICATIONS OF OPERATORS
ALL STAFF TO BE EMPLOYED SHALL BE TO THE APPROVAL OF THE SUPERINTENDENT. PRIOR TO COMMENCEMENT OF SPRAYING, THE CONTRACTOR SHALL ALLOW FOR THE SUPERINTENDENT THAT THE FOREMEN, NOZZLEMAN AND DELIVERY EQUIPMENT OPERATIVES HAVE COMPLETED SATISFACTORY WORK IN SIMILAR CAPACITIES ELSEWHERE. WHERE REQUIRED BY THE SUPERINTENDENT, THE OPERATOR SHALL SPRAY PRE-CONSTRUCTION PANELS WHICH SHALL BE APPROVED BY THE SUPERINTENDENT BEFORE THE OPERATORS ARE EMPLOYED ON THE WORKS. SUCH PANELS MAY ALSO BE USED BY THE SUPERINTENDENT TO ASSESS THE COMPETENCE OF OPERATORS OR TRAINEES FOR WHOM SUCH CERTIFICATION IS NOT AVAILABLE.

SC5 PLANT
THE CONTRACTOR SHALL STATE THE NUMBERS AND TYPE OF PLANT PROPOSED TO BE USED FOR THE CONSTRUCTION OF THE WORKS.

SC6 SUBSTRATE PREPARATION
THE SURFACE SHALL BE COMPACT, TRIMMED, GRADED AS REQUIRED AND DAMP BEFORE THE APPLICATION OF SPRAYED CONCRETE. NATURAL SURFACES SHALL BE TRIMMED TO PROVIDE A SMOOTH SURFACE. SPRAYED CONCRETE SHALL BE APPLIED TO THE SURFACE IN SUCH A MANNER AS TO PREVENT THE APPLICATION OF SPRAYED CONCRETE OR CAUSE CEMENT LEACHING. THE WATER SHOULD BE LED BY PIPES OR GUTTERS TO SOME POINT WHERE IT MAY BE PLUGGED OFF AFTER THE APPLICATION OF SPRAYED CONCRETE CONTAINING ABNORMALLY HIGH PROPORTIONS OF ADMIXTURE WHICH WILL INDUCE ACCELERATED SET. SUCH SPRAYED CONCRETE SHALL NOT BE CONSIDERED TO FORM PART OF THE STRUCTURAL THICKNESS. IN ADDITION, FIX POLYTHENE SHEETING AS NECESSARY TO PREVENT SHOTCRETE BECOMING TOO WET.

SC7 REINFORCEMENT
THE REINFORCEMENT SHOWN IS THE MINIMUM REQUIRED FOR THE PERMANENT STRUCTURAL CONDITION. IF ADDITIONAL REINFORCEMENT IS REQUIRED TO PREVENT SHOTCRETE SLUMP, SUCH ADDITIONAL REINFORCEMENT IS TO BE AT THE CONTRACTORS EXPENSE. ALL REINFORCEMENT MUST BE SPACED FROM AND SECURELY FIXED TO THE SOIL OR ROCK FACE SUFFICIENT TO WITHSTAND DISTORTION FROM THE SHOTCRETING PROCESS. MAINTAIN SPECIFIED COVER TO ALL REINFORCEMENT AT ALL TIMES.

SC8 SPRAYING PROCEDURE
SPRAYED CONCRETE SHALL BE SPRAYED IN AIR TEMPERATURE LESS THAN 10° CELSIUS.
FRESHLY SPRAYED CONCRETE SHALL BE PROTECTED FROM RAIN OR WATER UNTIL THE SURFACE IS SUFFICIENT HARDNESS TO PREVENT DAMAGE. SPRAYING SHALL BE DISCONTINUED IF WIND OR AIR CURRENTS CAUSE SEPARATION OF THE NOZZLE STREAM DURING PLACEMENT. DURING STARTING OR STOPPING OF THE SPRAYING OPERATION OR WHENEVER SPRAYING IS IRREGULAR, THE NOZZLE SHALL BE DIRECTED AWAY FROM THE WORKS.
ALL CORNERS AND ANY AREAS WHERE REBOUND CANNOT ESCAPE OR BE BLOWN FREE, SHALL BE FILLED PRIOR TO GENERAL SPRAYING. REBOUND SHALL NOT BE WORKED INTO THE CONSTRUCTION OR RE-USED IN THE WORKS.
GUIDES SHALL BE SET UP TO ESTABLISH FINISHED SURFACES. THESE GUIDES SHALL BE TO THE APPROVAL OF THE SUPERINTENDENT PRIOR TO SPRAYING.
PRIOR TO DRAINS PRESENT BEHIND THE FINISHED INFILL WALL IS TO BE PROTECTED FROM THE SPRAYED CONCRETE AS NOTED ON THE DRAWINGS AND/OR SPECIFICATION.
SPRAYED CONCRETE SHALL BE APPLIED SO THAT IT NEITHER SAGS NOR SLUMPS.
SPRAYED CONCRETE SHALL BE TROWELLED TO A SMOOTH SURFACE.
PRIOR TO SPRAYING OF THE FINAL LIFT OF INFILL WALL THE VERTICAL STRIP DRAIN (IF PRESENT) IS THE BE CONNECTED TO THE DRAINAGE SYSTEM.
CURE SURFACE WITH AN APPROVED SPRAYED CHLORINATED RUBBER COMPOUND IN ACCORDANCE WITH THE MANUFACTURER'S INSTRUCTIONS WITHIN THREE HOURS OF TROWELLING, BUT NOT SO SOON AS TO CAUSE SLUMPING.
MAXIMUM DEVIATION FROM A 1m STRAIGHT EDGE SHALL BE 10mm.
ALL WASTE MATERIAL AS MATERIALS DELIVERED TO THE SPRAYED CONCRETE MIXER SHALL BE KEPT AND MADE AVAILABLE TO THE SUPERINTENDENT.

SC9 JOINTS
THE POSITION AND TYPE OF ALL CONSTRUCTION JOINTS SHALL BE APPROVED BY THE SUPERINTENDENT. CONSTRUCTION JOINTS SHALL BE FORMED IN ONE OF THE THREE METHODS BELOW:
A) BY PLACING OR TRIMMING THE SPRAYED CONCRETE TO AN ANGLE OF APPROXIMATELY 30° TO THE HORIZONTAL IN SECTION
B) BY FORMING AN APPROXIMATELY SQUARE JOINT TO PART DEPTH BY PLACING THE SPRAYED CONCRETE AGAINST A FORMER.
C) BY FORMING A FULL DEPTH SQUARE JOINT PLACED AGAINST A FORMER.
ARCH FORMERS AND SCREEDS SHALL HAVE REBOUND EXITS. REFER TO DRAWINGS FOR STARTER BAR DETAILS AT HORIZONTAL CONSTRUCTION JOINTS.

SC10 QUALITY CONTROL
THE CONCRETE COMPRESSIVE SAMPLES SHALL BE AS PER TESTING PROCEDURE FOR NORMAL DENSE WEIGHT CONCRETE OUTLINED IN THE CONCRETE SPECIFICATION

## BORED PILES VERTICAL LOAD DESIGN NOTES:

1 BORED PILE TOE RL's SHOWN ON ELEVATION ARE MINIMUM RL'S REQUIRED FOR SITE RETENTION
CONTRACTOR TO DESIGN PILES FOR VERTICAL LOADS

2 FOUNDATIONS SHALL BE DESIGNED IN ACCORDANCE WITH AS2159-9AA PILING CODE AND TO THE RECOMMENDATIONS OUTLINED IN THE GEOTECHNICAL REPORT

3 FOUNDATIONS SHALL BE DESIGNED FOR LOADINGS SPECIFIED WITH