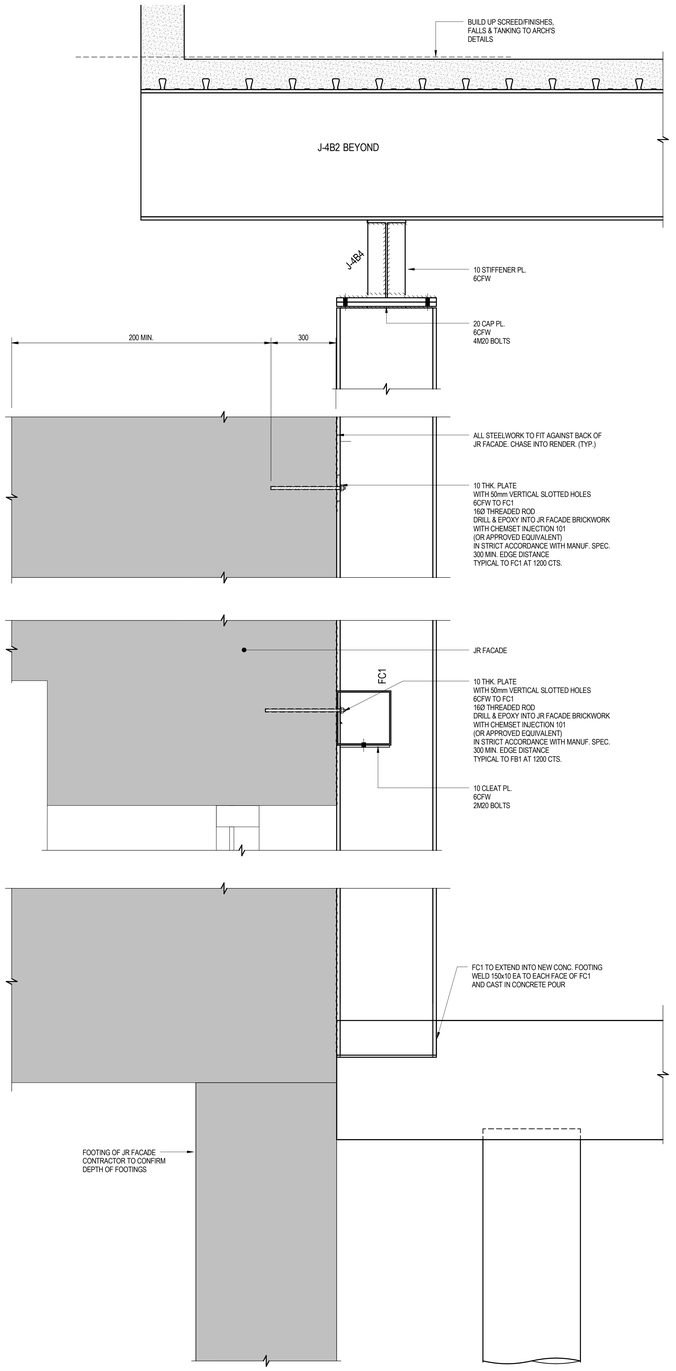

DETAIL S.03A
SCALE 1 : 10 S701

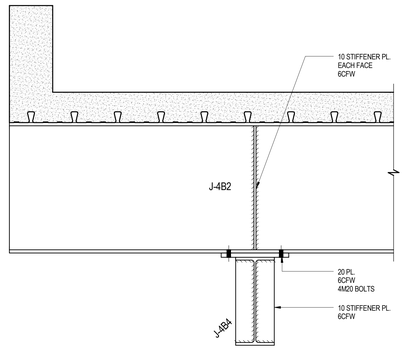

SECTION S.04
SCALE 1 : 10 S701

Rev	Description	By	Date
A	CONSTRUCTION ISSUE	BP	14.01.13
7	TENDER ISSUE	BP	07.09.12
6	TENDER ISSUE	BP	31.08.12
5	90% C.D ISSUE	BP	17.08.12
4	TENDER ISSUE	BP	08.08.12
3	75% C.D ISSUE	BP	27.07.12
2	50% C.D ISSUE	BP	15.06.12
1	PRELIMINARY ISSUE	BP	04.06.12

CONSTRUCTION ISSUE

0 2000 4000 6000 8000 10000

SCALE INDICATED FOR REFERENCE ONLY. DO NOT SCALE DRAWING.

DISCLAIMER:
COPYRIGHT
THE CONTENT OF THIS DRAWING IS VESTED IN IRWINCONSULT PTY LTD AND THIS DRAWING(S) IS NOT TO BE REPRODUCED OR COPIED OUTWARDS OR IN PART, SLAVE FORM, WITHOUT THE PRIOR WRITTEN APPROVAL OF IRWINCONSULT PTY LTD.
THE RECIPIENT IS RESPONSIBLE FOR ENSURING THAT THEY REVIEW THE STATUS OF THIS DRAWING, AND ARE IN RECEIPT OF THE CURRENT REVISION PRIOR TO USE.
EXCEPT WHERE FIGURED DIMENSIONS HAVE BEEN PROVIDED, IRWINCONSULT IS NOT RESPONSIBLE FOR DIMENSIONING AND SETTING OUT OF THE WORKS. DIMENSIONS MUST BE CHECKED ON SITE BY THE BUILDER PRIOR TO COMMENCEMENT OF WORK. THE CONTRACTOR IS RESPONSIBLE FOR PRODUCTION OF FABRICATION, SHOP DRAWINGS WHERE TRADE ARE REQUIRED.
THIS DRAWING HAS BEEN PRODUCED FOR THE NAMED CLIENT FOR USE ON THIS PROJECT ONLY AND IS NOT TO BE USED FOR ANY OTHER PURPOSE.

irwinconsult
Level 3, 289 Wellington Parade South
East Melbourne VIC 3002
t +61 3 9622 9700 f +61 3 9650 6664
mlb@irwinconsult.com.au ABN 89 050 214 894

Project
FACULTY OF ARCHITECTURE
BUILDING AND PLANNING

Client
UNIVERSITY OF MELBOURNE
PARKVILLE CAMPUS

Drawing Title
HERITAGE FACADE RETENTION DETAILS - SHEET 3

Date	Drawn	Checked	Approved
05/29/12	B.P	D.I	B.R

Scales at A0	Job No.	Sheet No.	Rev.
1 : 10	09ME0504	S703	A

14/01/2013 9:58:30 AM