GRID LOCATION:
4/C-G

GENERAL NOTES FOR LVL BEAM PREFABRICATION - SEE WSD 1

irwinconsult — present – enrich the future

STRUCTURAL SHOP DRAWING REVIEW

- ✓ REVIEWED
- REVIEWED CORRECTION REQUIRED
- RESUBMISSION REQUIRED BEFORE PROCEEDING WITH THE WORK

IT IS THE CONTRACTOR'S RESPONSIBILITY TO COORDINATE ALL SERVICES AND WORKS AND TO ENSURE THAT WORK CONFORMS TO THE SPECIFICATION, JOB DIMENSIONS, AND OTHER REQUIREMENTS NECESSARY FOR THE PROPER EXECUTION OF THE WORK.

DATE: 21/11/2013 REVIEWED BY: nh1

ITEM:	LABEL:	MATERIAL:	SECTION:	LENGTH
FLANGE	T & B	hySPAN	ex 600x75	2/15.0 m, 2/2.8 m, 2/2.5 m
FLANGE SPLICE	TS & BS	hySPAN	ex 600x75	1/2.2 m, 1/2.0 m, 2/1.8 m
STIFFENER	S	hySPAN	ex 600x63	3/1.2 m, 4/1.1 m, 5/1.0 m, 2/0.9 m, 1/0.8 m
WEB	W	hySPAN 4xb	ex 1200x63	4/10.3 m, 4/10.2 m
WEB SPLICE	WS	hySPAN 4xb	ex 150x63 (horz.) **ex 200x63** (vert.)	4/10.0 m 2/1.0 m
END BLOCK	EB	hySPAN	ex 240x75	2/1.3 m, 2/0.9
BLOCK	B	hySPAN	ex 300x63	3/0.6 m
DECORATIVE COVER	CL15	ASH VENEERED MDF	2400 X 1200 sheets	13 mm thickness

hySPAN is laminated veneer lumber to AS/NZS 4357. 4xb has 4 cross band plies in the LVL construction.

NOTE: SEE ATTACHED / AR-6209[A] FOR VENEER PANEL BREAKUP AND GRAIN PATTERN/ORIENTATION [JWA]

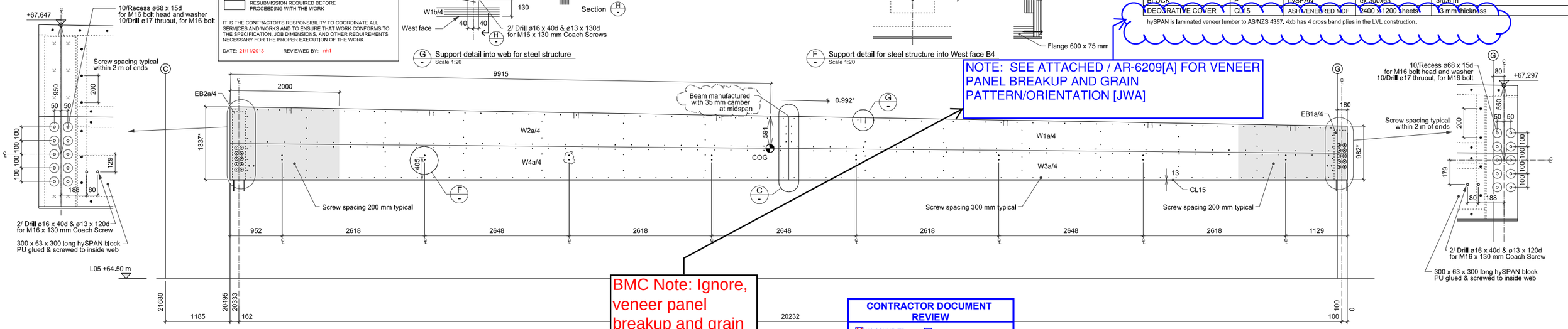

BMC Note: Ignore, veneer panel breakup and grain direction already approved by JWA. JWA-AA-000789

ELEVATION - Showing West Face
Scale 1:50
NOTE: Web on East Face mirrored along Gridline 4

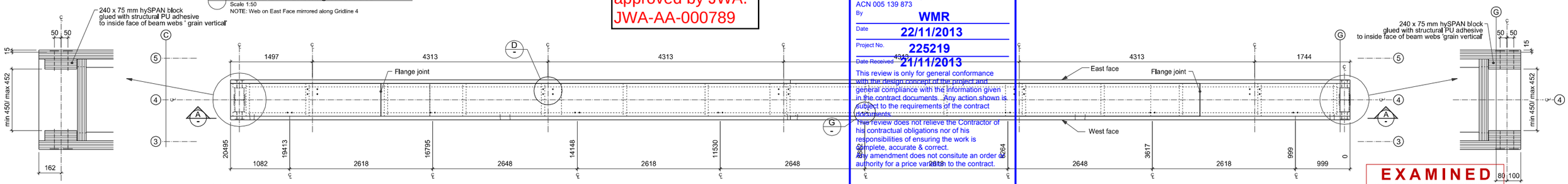

PLAN VIEW
Scale 1:50

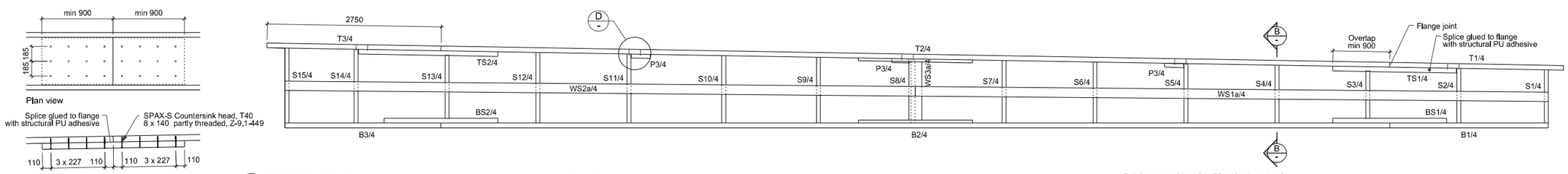

Flange joint typical
Scale 1:40

SECTION A-A - Showing framing and framing components for West face
Scale 1:50
NOTE: Framing components for East face mirrored along Gridline 4

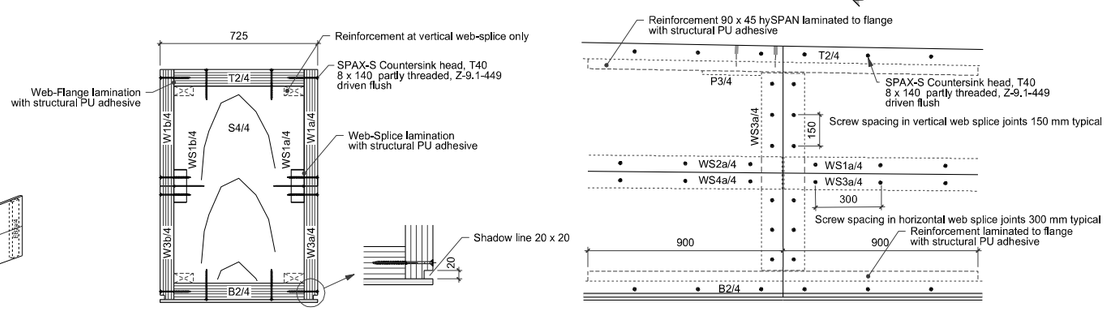

Web splice detail
Scale 1:20

Support detail for steel roof structure
Scale 1:20

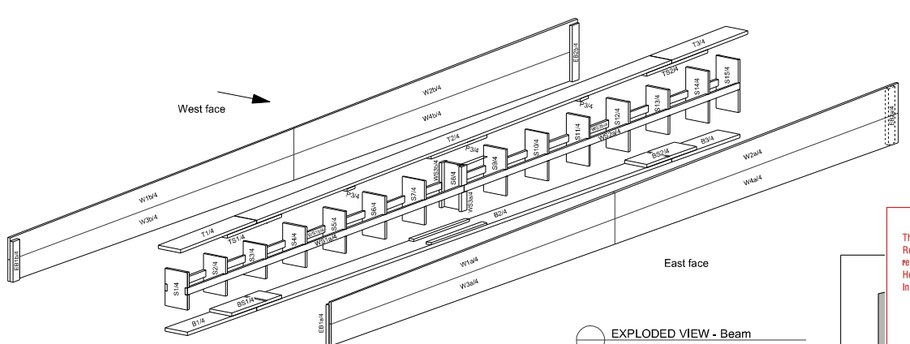

EXPLODED VIEW - Beam

CONTRACTOR DOCUMENT REVIEW

☒ NO COMMENTS ☐ MAKE CORRECTIONS NOTED
☐ REJECTED ☐ REVISE AND RESUBMIT

Aurecon Australia Pty Ltd
ACN 005 139 873
By **WMR**
Date **22/11/2013**
Project No. **225219**
Date Received **21/11/2013**

This review is only for general conformance with the design concept of the project and general compliance with the information given in the contract documents. Any action shown is subject to the requirements of the contract documents.
This review does not relieve the Contractor of his contractual obligations nor of his responsibilities of ensuring the work is complete, accurate & correct.
Any amendment does not consitute an order or authority for a price variation to the contract.

* The thickness of the decorative cover to the bottom is NOT included in these dimensions.

EXAMINED

We have examined these drawings for conformance with project design intent. The review does NOT in any way relieve the Contractor from responsibility for correctness of dimensions, quantities, calculations, construction, fabrication techniques & co-ordination of work of other trades. Nor does the review imply that all relevant information is necessarily shown. The review of this drawing does NOT in any way constitute an instruction or direction under the Contract. Nor does the review relieve the Contractor of any contractual obligations.

This document is returned to the Contractor for:

- AMEND & RESUBMIT ☐
- AMEND AS NOTED ☑
- NO COMMENTS ☐
- REJECTED ☐

21/11/2013

John Wardle Architects

Brookfield Multiplex Constructions Pty Ltd

This drawing has been review for conformity with design intent and scope requirements. Review does not include approval of dimensions, sizes, weights or relieve the Consultant from responsibility for errors, omissions or compliance with the respective requirements of the Head Contract or Consultants Agreement.
In accordance with Brookfield Multiplex or other comments this drawing is:

- ☑ Satisfactory
- ☐ Satisfactory subject to comments
- ☐ Not satisfactory - amendment & resubmission required

Signed APPROVED By mbuckthought at 7:20 am, Nov 28, 2013 Date

WSD 5

REV	DATE	DESCRIPTION
B	20.11.2013	ISSUED FOR APPROVAL
A	13.11.2013	ISSUED FOR APPROVAL
-	19.10.2013	ISSUED FOR APPROVAL

Rev A: Camber increased, reinforcement at web-splice added, steel frame bolt locations revised

ROOF BEAM Mark: B4 no. off 1

PROJECT:
Faculty of Architecture, Building and Planning
The University of Melbourne
757 Swanston Street, Parkville Campus, VIC 3010
FOR : Brookfield Multiplex Constructions Pty Ltd

Scale 1:50 A2 | Job No. 13013 | Issue Date 22 October 2013 | Drawn CE | Drawing No. 5060 | Rev. B

WORKSHOP DRAWING

COPYRIGHT RESERVED