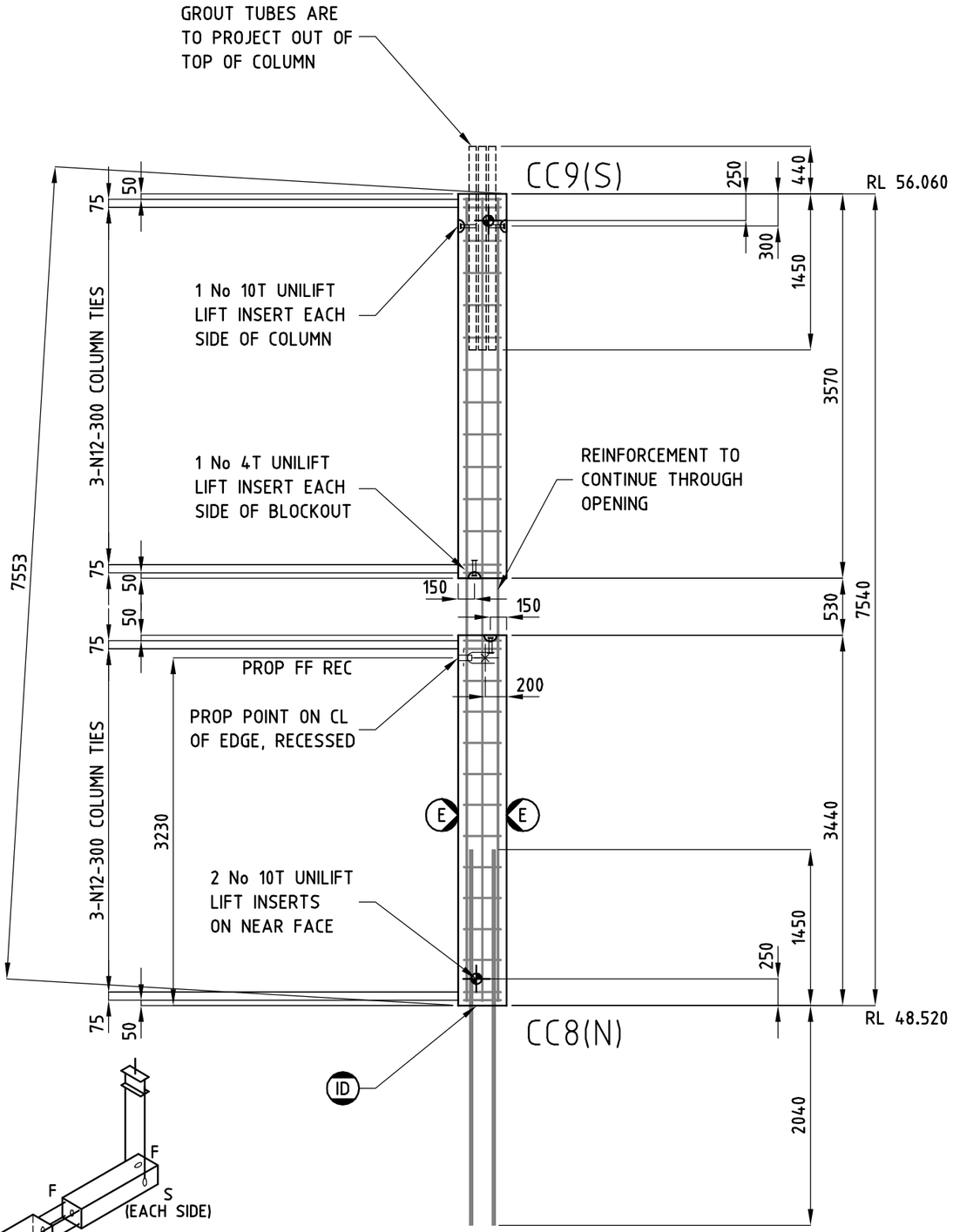

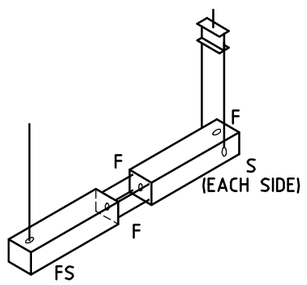

F - FACTORY
S - SITE
FS - FACTORY & SITE LIFTER
RIGGING DIAGRAM E5

COLUMN CC9
GRIDS G.9/11.9

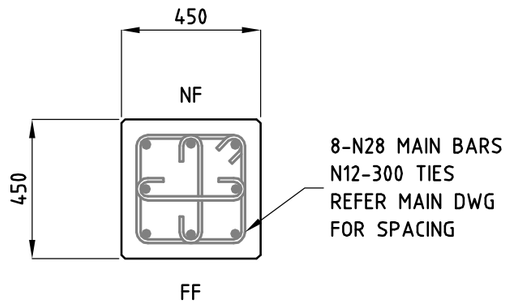

REINFORCEMENT

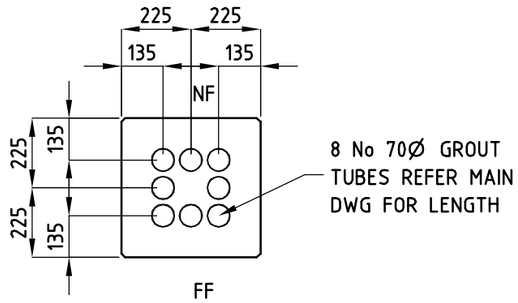

TOP GROUT TUBES

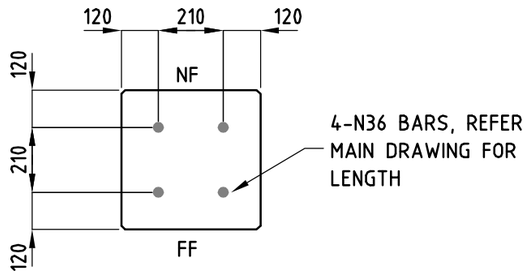

BOTTOM BARS

NOTES:

- COG BARS 400 MM OVERLAP BARS 1000 MM UNO
- PROVIDE 4T LIFT INSERTS (N12 TENSION BAR)
- REV B - MIDDLE LIFTERS REVISED
- RIGGING TO BE APPROVED BY ERECTION ENGINEER

APPROVED FOR CONSTRUCTION

THICKNESS	450 MM
NF FINISH	TROWEL
FF FINISH	GOOD TABLE
TYPE	COLUMN
VOLUME	1.44 M^3
GROSS AREA	3.39 M^2
NETT AREA	3.20 M^2
MASS	3.85 T
COG X	225 MM
COG Y	3771 MM
ERECT LEVEL	CURRENT
GRADE AT 28 DAYS	N50
GRADE AT DELIVERY	N20
GRADE AT FACTORY	N10
CONCRETE	NORMAL
MIX	50W-50G [C]
EXTERNAL COVER	35 MM
INTERNAL COVER	35 MM
EDGE CHAMFER	12 MM
DOWEL BARS	NONE

QUALITY ASSURANCE

CONC	SETOUT	REO

ELEVATION	G.9/11.9
VIEWED	LOOKING NORTH
SCALE	1:50
EXT REF	

JOB
UNIVERSITY OF MELBOURNE, FACULTY OF ARCHITECTURE

DRAWN:	6 AUG 13	SV
REVISED:	13 AUG 13	GSB

ADVANCED PRECAST (AUST) P/L
TELEPHONE 9706 5111 FAX 9706 4551

JOB NO	PANEL NO	REV
3131	1P2081	B