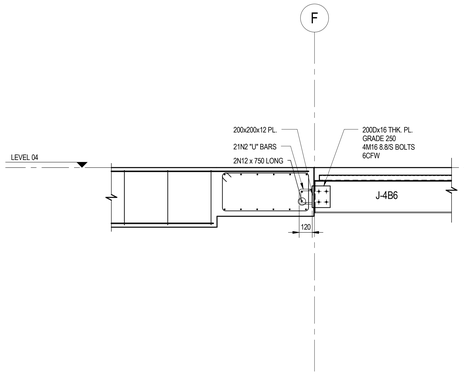


SECTION J-S.11
SCALE 1 : 20 S720

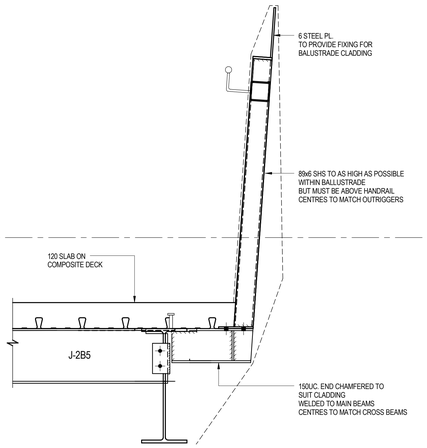


SECTION J-S.12
SCALE 1 : 10 S720

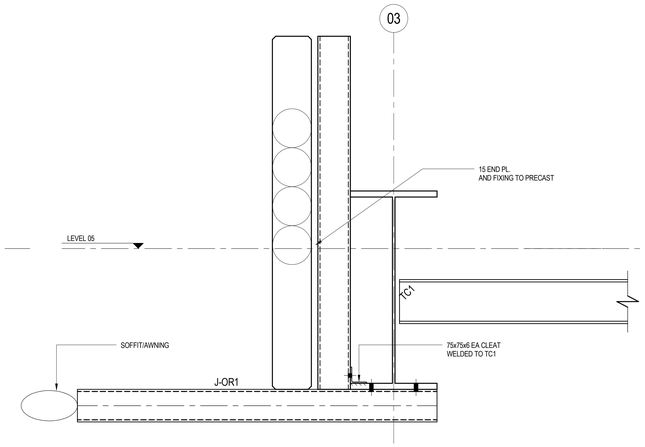


SECTION J-S.13
SCALE 1 : 10 S720

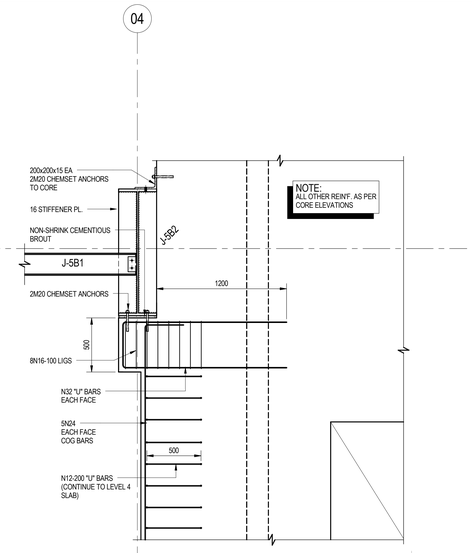


SECTION J-S.14
SCALE 1 : 20 S720

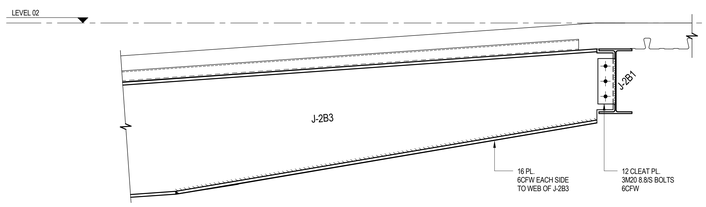


SECTION J-S.15
SCALE 1 : 10 S720

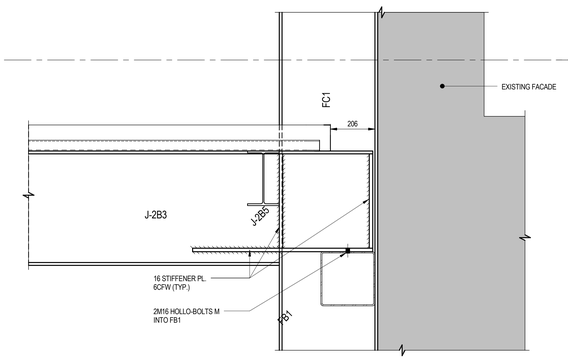


SECTION J-S.16
SCALE 1 : 10 S720

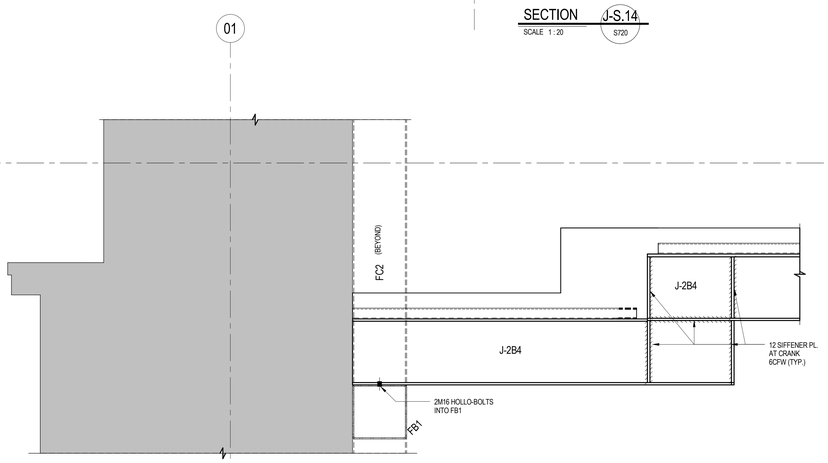


SECTION J-S.17
SCALE 1 : 10 S720

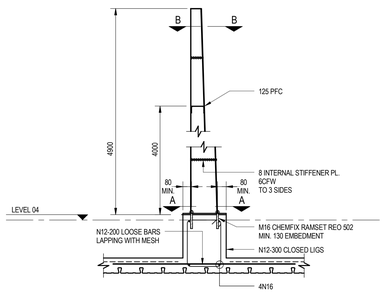


SECTION J-S.18
SCALE 1 : 20 S720

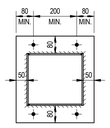


VIEW A-A
SCALE: 1 : 10

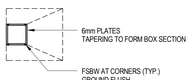


VIEW B-B
SCALE: 1 : 10

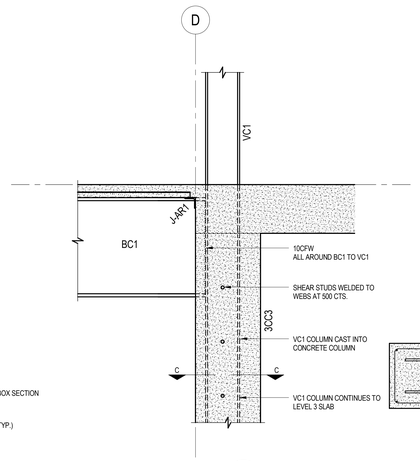


SECTION J-S.19
SCALE 1 : 20 S720

VIEW C-C
SCALE: 1 : 20

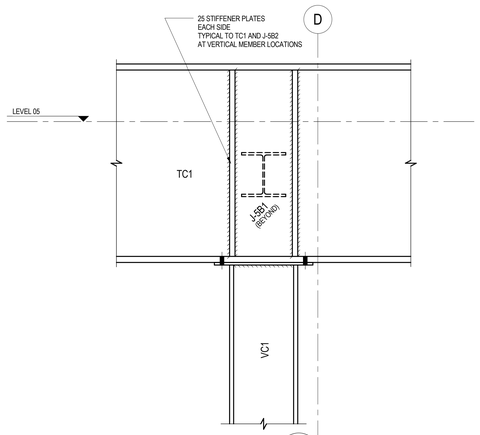


DETAIL J-D.01
SCALE 1 : 10 S720

NOTE:
ALL STEELWORK ON THIS DRAWING TO BE
90 MIN FIRERATED TO ARCHITECT'S
SPECIFICATION

| Rev | Description | By | Date |
|---|---|---|---|
| A | CONSTRUCTION ISSUE | BP | 14.01.13 |
| 5 | TENDER ADDENDUM | WL | 09.10.12 |
| 4 | TENDER ISSUE | BP | 07.09.12 |
| 3 | TENDER ISSUE | BP | 31.08.12 |
| 2 | 90% C.D ISSUE | BP | 17.08.12 |
| 1 | 75% C.D ISSUE | BP | 27.07.12 |

CONSTRUCTION ISSUE

0 2000 4000 6000 8000 10000
SCALE INDICATED FOR REFERENCE ONLY. DO NOT SCALE DRAWING.

DISCLAIMER
COPYRIGHT OF THIS DRAWING IS VESTED IN IRWINCONSULT PTY LTD AND THIS DRAWING IS NOT TO BE REPRODUCED OR COPIED WITHOUT THE WRITTEN PERMISSION OF IRWINCONSULT PTY LTD. ABN 89 050 214 894
THE RECEIPTOR OF BEYOND WHO IS THE ORIGINAL THAT THIS VERSION THE CITIS OF THIS DRAWING, AND ARE IN POSSEST OF THE CURRENT REVISION PRIOR TO USE.
DO NOT WHERE FIGURED DIMENSIONS HAVE BEEN PROVIDED, IRWINCONSULT IS NOT RESPONSIBLE FOR DIMENSIONING AND SETTING OUT THIS DRAWING HAS NOT BEEN PRODUCED TO A STATE OF DIMENSIONAL ACCURACY SUFFICIENT FOR FABRICATION. THE DIMENSIONS MUST BE VERIFIED BY THE CONTRACTOR PRIOR TO FABRICATION OR ANY WORK BEING UNDERTAKEN.
THIS DRAWING HAS BEEN PRODUCED FOR THE NAMED CLIENT FOR USE ON THIS PROJECT ONLY AND IS NOT TO BE USED FOR ANY OTHER PURPOSE.

irwinconsult
Level 3, 289 Wellington Parade South
East Melbourne VIC 3002
t +61 3 9622 9700 f +61 3 9650 6664
mlb@irwinconsult.com.au ABN 89 050 214 894

Project
FACULTY OF ARCHITECTURE
BUILDING AND PLANNING

Client
UNIVERSITY OF MELBOURNE
PARKVILLE CAMPUS

Drawing Title
JUNGLE GYM DETAILS - SHEET 2

| Date | Drawn | Checked | Approved |
|---|---|---|---|
| 04/16/12 | B.P | N.H | B.R |

| Scales at A0 | Job No. | Sheet No. | Rev. |
|---|---|---|---|
| As indicated | 09ME0504 | S722 | A |

14/01/2013 9:58:51 AM

A0